DS-2DF8836I5V-AELW
4K Laser Smart PTZ Camera

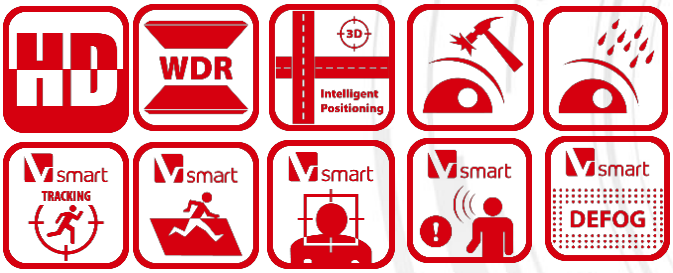

Hikvision 4K series DS-2DF8836I5V-AELW smart PTZ dome cameras are able to capture high quality images in dim light environment with its laser IR light, which can reach up to 500m IR distance. Embedded with 1/1.9'' progressive scan CMOS chip makes true WDR (120dB) and 8MP real-time resolution possible. With the 36X optical zoom Day/Night lens, the camera offers more details over expansive areas.

The 4K series PTZ camera also features a wide range of smart functions, including face detection, intrusion detection, line crossing detection and audio exception, benefitting users with great improvement on security efficiency, more importantly, with key events / objects being recorded for further forensic needs. These features, combined with smart tracking, which enables the camera to detect any progressively moving object and follow it within the camera's area of coverage without fault. Smart Defog is further supported to improve image quality in challenging conditions.

Key Features

- 1/1.9" HD CMOS sensor
- 4K 8MP(4096x2160)
- 36X Optical Zoom
- 120dB True WDR
- Smart Tracking
- Smart Detection
- 500m IR distance
- Support wiper
- Hi-PoE / 24VAC power supply

Function Description

Basic function

- High performance CMOS, up to 4096x2160 resolution
- ±0.1° Preset Accuracy
- ONVIF(Open Network Video Interface Forum), CGI(Common Gateway Interface), PSIA(Physical Security Interoperability Alliance), to ensure greater interoperability between different platforms and compatibility
- 3D intelligent positioning function
- 3D DNR
- IP66 standard
- 7 alarm inputs and 2 alarm outputs; 1 audio input and 1 audio output
- Support wiper

Smart Function

- Smart tracking modes: Manual/ Panorama/ Intrusion trigger/ Line crossing trigger/ Region entrance trigger/ Region exiting trigger, support smart tracking when patrol between multiple scenarios
- Smart detection: support Face detection, Intrusion detection, Line crossing detection, Audio exception detection, Region entrance detection, Region exiting detection
- Smart recording: support edge recording, support dual-VCA for smart search in smart NVR
- Smart image processing: support optical defog, HLC, smart IR, EIS
- Smart codec: low bit rate, ROI

Camera function

- compensation and auto day & night switch
- Min. Illumination: 0.02Lux@(F1.5,AGC ON)(Color), 0.002Lux@(F1.5,AGC ON)(B/W), 0 Lux with IR
- Up to 500m IR distance
- Support privacy mask with multiple colors and mosaics on polygonal areas

PTZ functions

- 360° endless pan range and -20°~ 90° tilt range;
- 0.1°~ 160°/s Manual Pan Speed and 0.1°~ 120°/s Manual Tilt Speed
- 240°/s Pan Preset Speed and 200°/s Tilt Preset Speed
- 300 presets programmable; preset image freezing capability
- 8 patrols, up to 32 presets per patrol
- 4 patterns, with the recording time not less than 10 minutes per pattern
- Proportional zoom function
- Park action: auto call up of PTZ movement, after a defined time of inactivity
- Power-off memory: restore PTZ & Lens status after reboot.

Network function

- H.264/MJPEG video compression; H.264 encoding with Baseline/Main/High profile
- ROI(Region of Interest) encoding(support 24 areas with adjustable levels)
- Built-in Web server
- Onboard storage, up to 128GB
- Support up to 8 NAS storage; Edge recording(transmit the videos from SD card to the NAS after network resumed)
- HTTPS encryption and IEEE 802.1X port-based network access control
- Support trip-streams
- Multiple network protocols supported: IPv4/Ipv6, HTTP, HTTPS, 802.1X, QoS, FTP, SMTP, UPnP, SNMP, DNS, DDNS, NTP, RTSP, RTP, TCP, UDP, IGMP, ICMP, DHCP, PPPoE

Specifications

Model	*DS-2DF8836I5V-AELW*
Camera Module	
Image Sensor	1/1.9'' Progressive Scan CMOS
Min. Illumination	F1.5, 50IRE, AGC On: Color: 0.02 lux, B/W : 0.002 lux, 0 lux with IR
Max. Image Resolution	4096x2160
Focal Length	6.2-202mm, 36x
Digital Zoom	16X
Zoom Speed	Approx.7.4s(Optical Wide-Tele)
Angle of View	56.8-2.02 degree (Wide-Tele)
Min. Working Distance	10-1500mm(Wide-Tele)
Aperture Range	F1.55~F4.8
Focus Mode	Auto / Semiautomatic / Manual
WDR	120dB
S / N Ratio	≥ 55dB
Shutter Time	50Hz: 1~1/30,000s; 60Hz: 1~1/30,000s
AGC	Auto / Manual
White Balance	Auto / Manual /ATW/Indoor/Outdoor/Daylight lamp/Sodium lamp
Day & Night	IR Cut Filter
Privacy Mask	24 privacy masks programmable; optional multiple colors and mosaics
Optical Defog	Support
Enhancement	3D DNR, HLC/BLC, SVC
Pan and Tilt	
Range	Pan:360° endless; Tilt: -20°~90°(Auto Flip)
Speed	Pan Manual Speed: 0.1°~160°/s, Pan Preset Speed: 240°/s Tilt Manual Speed: 0.1°~120°/s, Tilt Preset Speed: 200°/s
Number of Preset	300
Patrol	8 patrols, up to 32 presets per patrol
Pattern	4 patterns, with the recording time not less than 10 minutes per pattern
Park Action	Preset / Patrol / Pattern / Auto scan / Tilt scan / Random scan / Frame scan / Panorama scan
Scheduled Task	Preset / Patrol / Pattern / Auto scan / Tilt scan / Random scan / Frame scan / Panorama scan/Dome reboot/Dome adjust/Aux output
Smart Features	
Smart tracking	Manual/ Panorama/ Intrusion trigger/ Line crossing trigger/ Region entrance trigger/ Region exiting trigger Smart tracking when patrol between multiple scenarios
Smart detection	Face detection, Intrusion detection, Line crossing detection, Audio exception detection, Region entrance detection, Region exiting detection
ROI encoding	Support 24 areas with adjustable levels
Infrared	
IR Distance	Up to 500m
IR Intensity	Automatically adjusted, depending on the zoom ratio

Alarm	
Alarm I/O	7/2
Alarm Trigger	Face detection, Intrusion detection, Line crossing detection, Region entrance, Region exiting, Audio exception detection, Motion detection, Dynamic analysis, Tampering alarm, Network disconnect, IP address conflict, Storage exception
Alarm Action	Preset, Patrol, Pattern, Micro SD/SDHC card recording, Relay output, Notification on Client, Send Email, Upload to FTP, Trigger Channel
Input/Output	
Monitor Output	1.0V[p-p] / 75Ω, NTSC (or PAL) composite, BNC
Audio Input	1 Mic in/Line in interface, line input: 2-2.4V[p-p]; output impedance: 1KΩ, ±10%
Audio Output	1 Audio output interface, line level, impedance: 600Ω
Network	
Ethernet	10Base-T / 100Base-TX, RJ45 connector
Main Stream	50Hz:25fps(4096×2160, 3840×2160, 3072×1728, 2560×1440, 1920×1080, 1280×720) 60Hz:24fps(4096×2160), 30fps(3840×2160, 3072×1728, 2560×1440, 1920×1080, 1280×720)
Sub Stream	50Hz: 25fps(704×576, 352×288, 176×144); 60Hz: 30fps(704×480, 640×480, 352×240)
Third Stream	50Hz: 25fps(704×576, 352×288, 176×144); 60Hz: 30fps(704×480, 640×480, 352×240)
Image Compression	H.264/MJPEG, H.264 encoding with Baseline/Main/High profile
Audio Compression	G.711ulaw/G.711alaw/G.726/MP2L2/G.722/PCM
Protocols	IPv4/IPv6, HTTP, HTTPS, 802.1X, QoS, FTP, SMTP, UPnP, SNMP, DNS, DDNS, NTP, RTSP, RTP, TCP, UDP, IGMP, ICMP, DHCP, PPPoE
Simultaneous Live View	Up to 20 users
Mini SD Memory Card	Support up to 128GB Micro SD/SDHC/SDXC card. Support Edge recording
User/Host Level	Up to 32 users,3 Levels: Administrator, Operator and User
Security Measures	User authentication (ID and PW); Host authentication (MAC address); IP address filtering
System Integration	
Application programming	Open-ended API, support ONVIF, PSIA, CGI and Genetec
Web Browser	IE 7+, Chrome 18 +, Firefox 5.0 +, Safari 5.02 +, support multi-language
RS-485 Protocols	HIKVISION, Pelco-P, Pelco-D, self-adaptive
Power	High-PoE&24 VAC, Max.60W
Working Temperature	-40°C ~ 65°C (-40°F ~ 149°F)
Humidity	90% or less
Protection Level	IP66, IK10, TVS 6,000V lightning protection, surge protection and voltage transient protection
Certification	FCC, CE, UL, RoHS, IEC/EN 61000, IEC/EN 55022, IEC/EN 55024, IEC /EN60950-1
Dimensions	Φ266.6(mm)×435(mm)
Weight (approx.)	8kg (approx.)
Mount Option	Long-arm wall mount: DS-1602ZJ; Corner mount: DS-1602ZJ-corner; Pole Mount: DS-1602ZJ-pole; Power box mount:DS-1602ZJ-box; Swan-neck mount: DS-1619ZJ

Order Models

DS-2DF8836I5V-AELW, Hi-POE & 24VAC, 500m IR

Dimensions

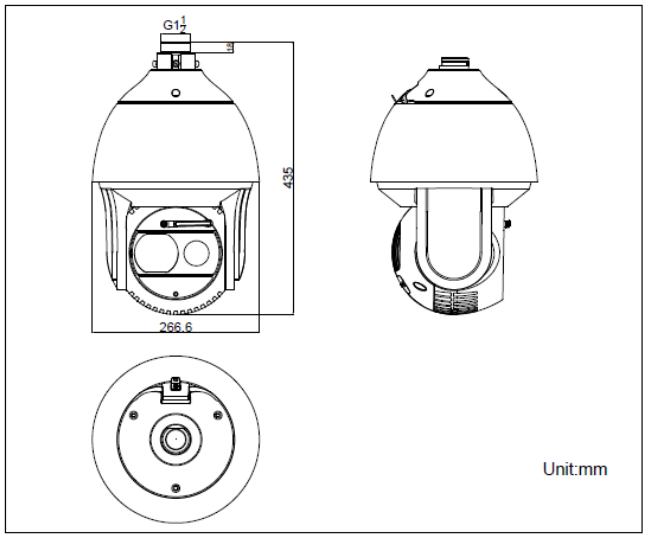

Accessories

DS-1602ZJ

Vall Mount

DS-1602ZJ-Conner

Conner Mount

DS-1602ZJ-Pole

Pole Mount

DS-1602ZJ-Box

Box Mount

DS-1663ZJ

Celling mount

DS-1661ZJ

Pendant mount

DS-1662ZJ

Pendant mount

DS-1619ZJ

Swan-neck Mount

DS-1100KI

Network Keyboard

DS-1005KI

USB Joy-stick

Distributed by

Headquarters
No.555 Qianmo Road, Binjiang District,
Hangzhou 310051, China
T +86-571-8807-5998
overseasbusiness@hikvision.com

Hikvision USA
T +1-909-895-0400
sales.usa@hikvision.com

Hikvision India
T +91-22-28469900
sales@pramahikvision.com

Hikvision Poland
T +48-22-460-01-50
poland@hikvision.com

Hikvision UK
T +44-1628-9021-4
support.uk@hikvision.com

Hikvision Europe
T +31-23-5542770
saleseuro@hikvision.com

Hikvision Italy
T +39-0438-6902
info.it@hikvision.com

Hikvision Singapore
T +65-6684-4718
sg@hikvision.com

Hikvision Middle East
T +971-4-8816086
salesme@hikvision.com

Hikvision France
T +33(0)1-85-330-444
info.fr@hikvision.com

Hikvision Oceania
T +61-2-8599-4233
salesau@hikvision.com

Hikvision Russia
T +7-495-669-67-99
saleru@hikvision.com

Hikvision Spain
T +34-91-737-16-55
info.es@hikvision.com

Hikvision Hong Kong
T +852-2151-1761

© Hikvision Digital Technology Co., Ltd. 2015 | Data subject to change without notice |